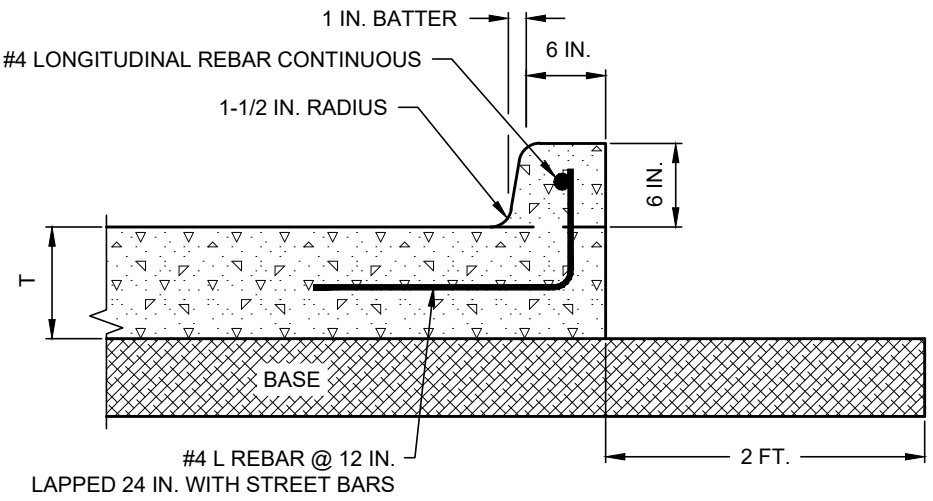

MONOLITHIC CURB

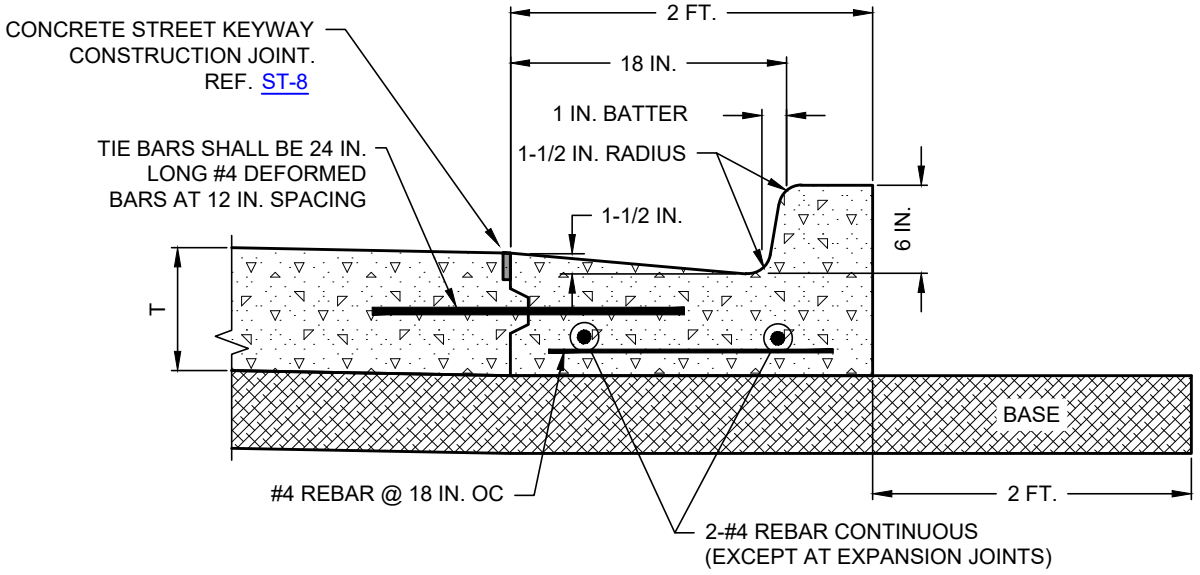

FOR USE EXCLUSIVELY IN CONCRETE CUL-DE-SACS

NOTES:

1. REQUIRED STEPS OF PREPARING PAVEMENT SURFACE TO RECEIVE CURB:
   - 1.1. ROUGHEN SURFACE BEFORE PAVEMENT TAKES FINAL SET.
   - 1.2. WIRE BRUSH, BROOM, AND WASH SURFACE TO REMOVE CURING COMPOUND, DIRT, DEBRIS, ETC.
   - 1.3. JUST BEFORE PLACING CURB, WET THE SURFACE WITH WATER AND APPLY DRY PORTLAND CEMENT IN SUFFICIENT QUANTITY TO MAKE A THICK PASTE.
2. CURB SHALL BE PLACED MONOLITHICALLY UNLESS OTHERWISE APPROVED BY THE CITY ENGINEER.

CONCRETE STREETS CURB DETAILS

(NO SCALE)

CITY OF WACO

ENGINEERING DIVISION

DISCLAIMER: THE USE OF THIS STANDARD IS GOVERNED BY THE "TEXAS ENGINEERING PRACTICE ACT". NO WARRANTY OF ANY KIND IS MADE BY THE CITY OF WACO FOR ANY PURPOSE WHATSOEVER. THE CITY OF WACO ASSUMES NO RESPONSIBILITY FOR THE CONVERSION OF THIS STANDARD TO OTHER FORMATS OR FOR INCORRECT RESULTS OR DAMAGES RESULTING FROM ITS USE.

REVISIONS

NO.	COMMENTS	BY	DATE
##	DESCRIPTION	FL	MM/DD/YYYY

DATE
01/01/2024

ST-7