CONFIGURATION SUMMARY TABLE				
LOCATION IDENTIFICATION	W_F FT	W_S FT.	D IN.	SLOPE %

CONFIGURATION SUMMARY TABLE SHALL BE SEALED, SIGNED, AND DATED BY RESPONSIBLE PROFESSIONAL ENGINEER

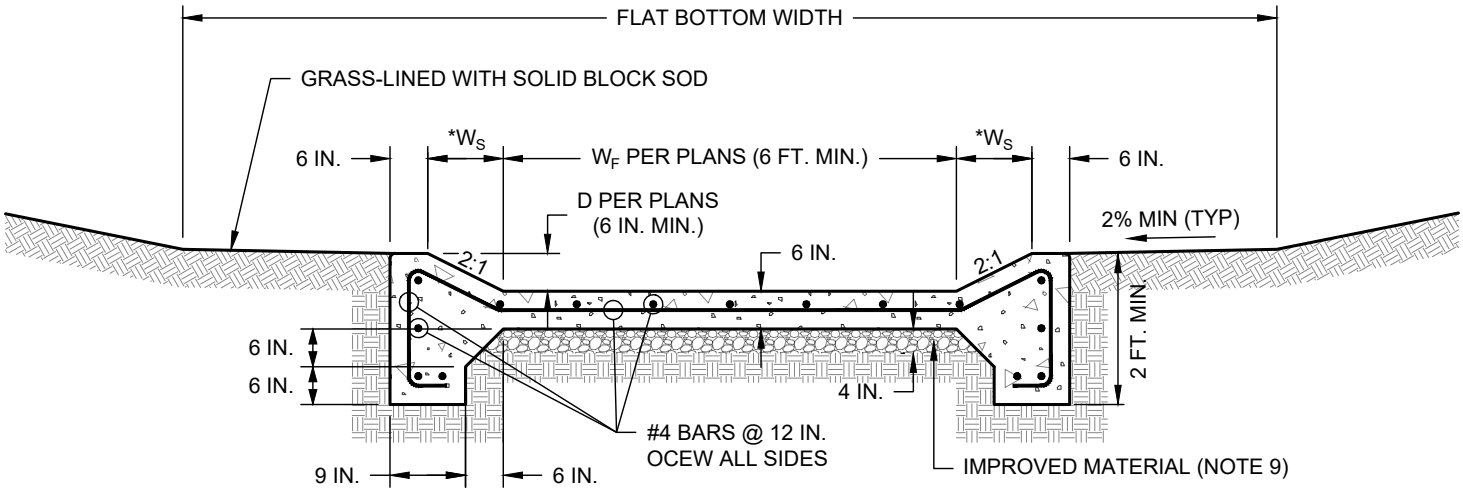

* W_S PER PLANS (1 FT. MIN.)

NOTES:

1. CHANNEL SHALL BE DESIGNED TO SUIT PROJECT SPECIFIC SITE.
2. CHANNEL CONFIGURATION IN PLANS TO BE CONSISTENT WITH HYDROLOGIC AND HYDRAULIC COMPUTATIONS IN ACCORDANCE WITH CURRENT CITY OF WACO STORMWATER DESIGN CRITERIA.
3. MINIMUM LONGITUDINAL SLOPE IS 0.5 PERCENT.
4. PLEASE REFER TO DETAIL G-7 FOR GENERAL CONCRETE NOTES.
5. WORK SHALL BEGIN AT DOWNSTREAM END OF CHANNEL AND PROGRESS UPSTREAM.
6. CONCRETE MUST BE PLACED TO ENSURE POSITIVE DRAINAGE SLOPE.
7. CONCRETE SHALL BE PLACED MONOLITHICALLY ACROSS CHANNEL.
8. TRANSVERSE EXPANSION JOINTS SHALL BE PLACED EVERY 600 FT. AT A MINIMUM, AND NO CLOSER THAN 200 FT.
9. 4 INCH BASE. TYPE “A” MATERIAL PER STANDARD SPECIFICATIONS FOR CONSTRUCTION SECTION 4.2 EXCAVATION AND BACKFILL PART 2: PRODUCT A. MATERIALS 3. TRENCH BACKFILL A. TYPE “A.” MATERIAL OR RECYCLED CRUSHED CONCRETE (TxDOT STANDARD SPECIFICATIONS FOR CONSTRUCTION ITEM 247 FLEXIBLE BASE TYPE D GRADE 1-2, EXCLUDING TYPE A MATERIAL, WITH MINIMUM P.I. OF FOUR) MECHANICALLY COMPACTED TO 95% OF THE MAXIMUM DRY DENSITY (TEX-113-E).
10. IF CONCRETE PILOT CHANNEL / DRAINAGE FLUME INTERSECTS OR IN ANY WAY IMPACTS AN EXISTING OR PROPOSED PEDESTRIAN ACCESS ROUTE OR SHARED USE PATH OR ELEMENTS OF THESE, THEN THE PLANS SHALL PROVIDE FOR COMPLIANCE WITH THE CURRENT UNITED STATES ARCHITECTURAL AND TRANSPORTATION BARRIERS COMPLIANCE BOARD (ACCESS BOARD) ACCESSIBILITY GUIDELINES FOR PEDESTRIAN FACILITIES IN THE PUBLIC RIGHT-OF-WAY (PROWAG) AND THE NECESSARY PEDESTRIAN ACCESS ROUTE / SHARED USE PATH ELEMENTS WITHIN THE FOOTPRINT OF THE CONCRETE PILOT CHANNEL / DRAINAGE FLUME AND BEYOND AS NECESSARY FOR COMPLIANCE WITH PROWAG SHALL BE CONSTRUCTED DURING THIS PHASE.

CONCRETE PILOT CHANNEL / DRAINAGE FLUME

(NO SCALE)

CITY OF WACO

ENGINEERING DIVISION

DISCLAIMER: THE USE OF THIS STANDARD IS GOVERNED BY THE "TEXAS ENGINEERING PRACTICE ACT". NO WARRANTY OF ANY KIND IS MADE BY THE CITY OF WACO FOR ANY PURPOSE WHATSOEVER. THE CITY OF WACO ASSUMES NO RESPONSIBILITY FOR THE CONVERSION OF THIS STANDARD TO OTHER FORMATS OR FOR INCORRECT RESULTS OR DAMAGES RESULTING FROM ITS USE.

REVISIONS

NO.	COMMENTS	BY	DATE
1	ADD NOTE 10; MODIFY DETAIL NAME	MZ	04/19/2024
##	DESCRIPTION	FL	MM/DD/YYYY

DATE
01/01/2024

SD-15