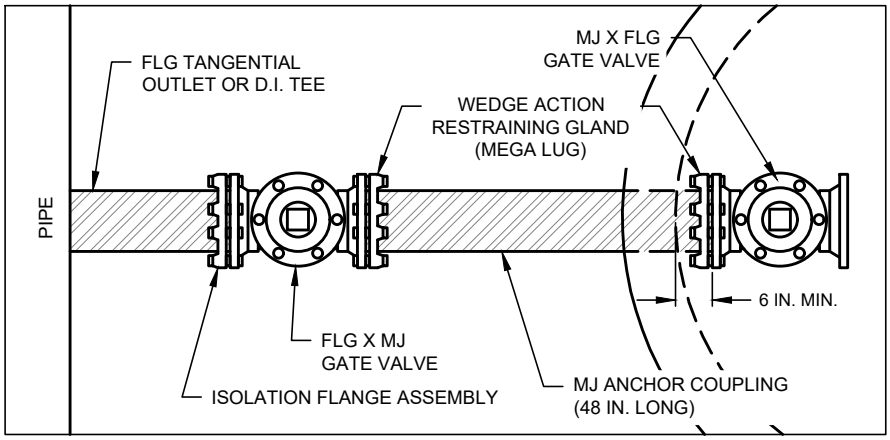

DETAIL A: PVC PIPE

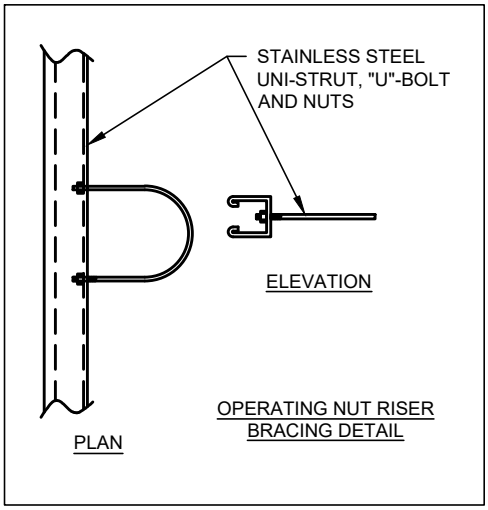

DETAIL B

BLOW-OFF SIZING	
MAIN NOM. PIPE Ø	BLOW-OFF SIZE
16 IN.	6 IN.
20 IN.	6 IN.
24 IN.	8 IN.
30 IN.	8 IN.
36 IN.	8 IN.
42 IN.	8 IN.
48 IN.	8 IN.
54 IN.	8 IN.

NOTES:

1. TANGENTIAL OUTLET SHALL BE INCLUDED AS A PART OF THE STANDARD BLOW-OFF ASSEMBLY LINE-ITEM.
2. MANHOLE PENETRATIONS: SHALL BE SEALED WITH WATERTIGHT FLEXIBLE CONNECTORS & NON-SHRINK EPOXY GROUT.
3. ALL PIPING TO BE RESTRAINED.
4. ALL COMPONENTS SHOWN ARE INCLUDED AS PART OF THE BLOW-OFF VALVE & VAULT BID ITEM.
5. ALL BOLTS SHALL BE STAINLESS STEEL.
6. WHERE SPACE IS LIMITED, RESTRAINED BENDS MAY BE UTILIZED TO REDUCE DISTANCE BETWEEN PIPELINE AND MANHOLE.

BELOW GROUND BLOW OFF ASSEMBLY

(NO SCALE)

SEE W-27A FOR ADDITIONAL DETAILS

CITY OF WACO

ENGINEERING DIVISION

DISCLAIMER: THE USE OF THIS STANDARD IS GOVERNED BY THE "TEXAS ENGINEERING PRACTICE ACT". NO WARRANTY OF ANY KIND IS MADE BY THE CITY OF WACO FOR ANY PURPOSE WHATSOEVER. THE CITY OF WACO ASSUMES NO RESPONSIBILITY FOR THE CONVERSION OF THIS STANDARD TO OTHER FORMATS OR FOR INCORRECT RESULTS OR DAMAGES RESULTING FROM ITS USE.

REVISIONS

NO.	COMMENTS	BY	DATE
##	DESCRIPTION	FL	MM/DD/YYYY

DATE 01/01/2024

W-27B