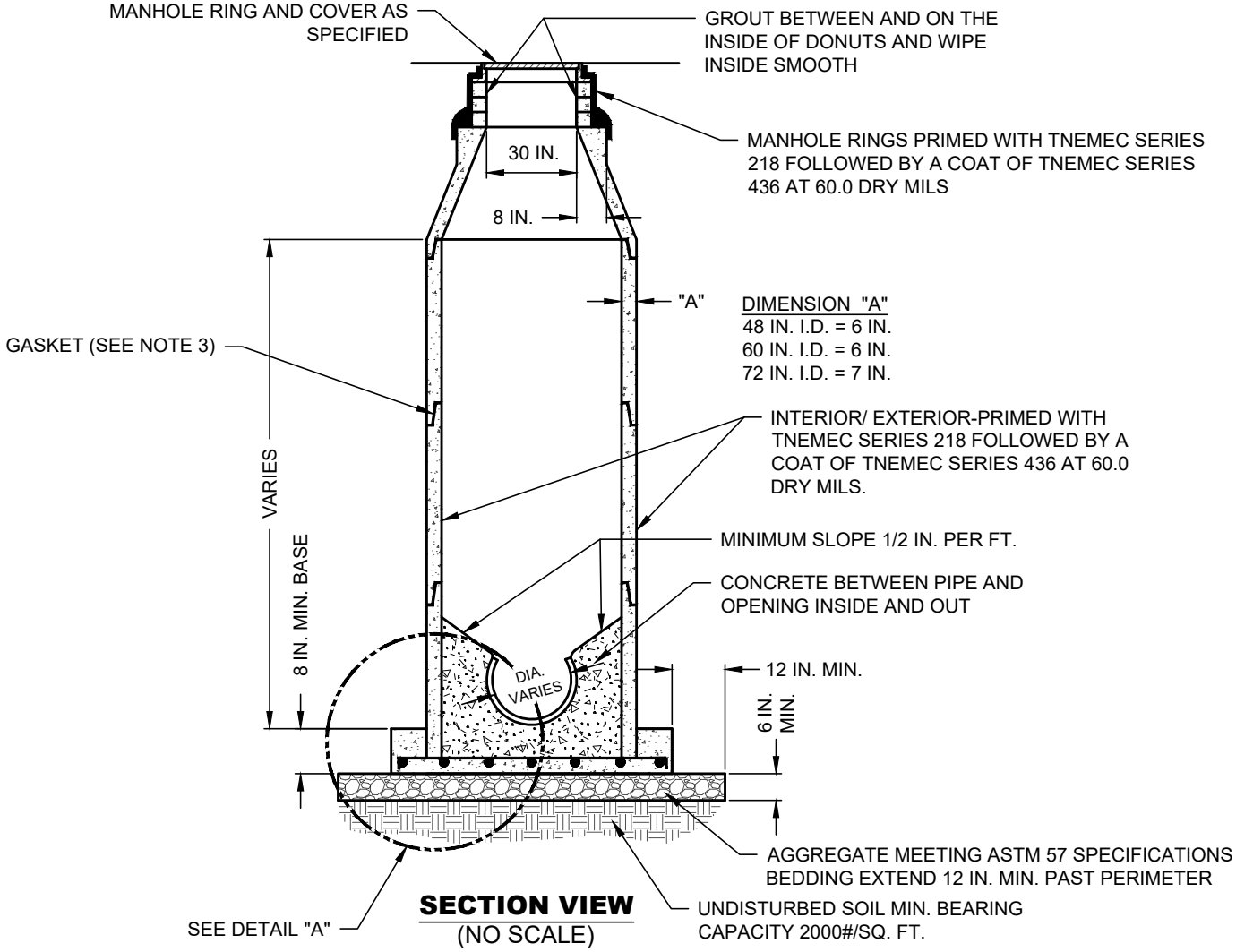


**SECTION VIEW**
(NO SCALE)

**NOTES:**

1. CAST IN PLACE BASE MUST BE MIN. 8 IN. THICK WITH #5 BARS @ 12 IN. OCEW AND SHALL EXTEND 1 FT. BEYOND MANHOLE.
2. BASE, FIRST RISER, AND AREA AROUND PIPE SHALL BE POURED MONOLITHICLY.
3. GASKET MEETING CITY OF WACO SPECIFICATIONS SHALL BE PLACED AT EACH JOINT PRIOR TO PLACING NEXT RISER SECTION, ENSURE.
4. CAST IN PLACE MANHOLE WILL REQUIRE DESIGN SUBMITTAL BY CONTRACTOR.
5. ALL MANHOLE STRUCTURES SHALL BE HS-20 RATED.
6. DOGHOUSE MANHOLE SHALL ONLY BE UTILIZED WITH PRIOR APPROVAL OF CITY ENGINEER.
7. MAY ELIMINATE THE USE OF INTERIOR AND EXTERIOR TNEMEC SERIES 218 FOLLOWED BY A COAT OF TNEMEC SERIES 436 AT 60 DRY MILS BY USE OF PRECAST CONCRETE ADMIXTURE: CONMICSHIELD® OR APPROVED EQUAL. CONTRACTOR SHALL PROVIDE A 5-YEAR MAINTENANCE BOND WARRANTY FOR PARTS AND LABOR FOR MANHOLE INSTALLATIONS IF THIS OPTION IS USED.

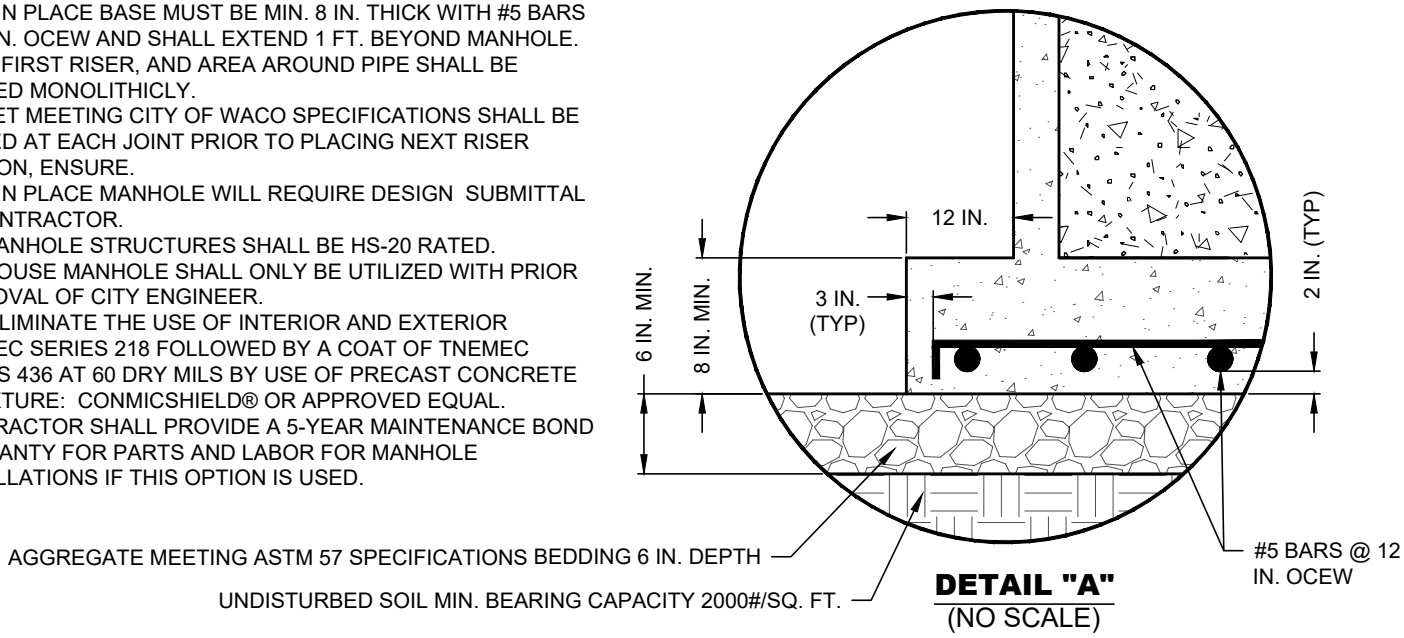


**DETAIL "A"**
(NO SCALE)

# DOGHOUSE MANHOLE

(NO SCALE)

CITY OF WACO

## ENGINEERING DIVISION

**DISCLAIMER:** THE USE OF THIS STANDARD IS GOVERNED BY THE "TEXAS ENGINEERING PRACTICE ACT". NO WARRANTY OF ANY KIND IS MADE BY THE CITY OF WACO FOR ANY PURPOSE WHATSOEVER. THE CITY OF WACO ASSUMES NO RESPONSIBILITY FOR THE CONVERSION OF THIS STANDARD TO OTHER FORMATS OR FOR INCORRECT RESULTS OR DAMAGES RESULTING FROM ITS USE.

REVISIONS

| NO. | COMMENTS | BY | DATE |
|---|---|---|---|
| | | | |
| | | | |
| | | | |
| | | | |
| | | | |
| ## | DESCRIPTION | FL | MM/DD/YYYY |

DATE
01/01/2024

S-12